Doric



VENTUS
automation

AUTOMATED
CHAINWINDERS

Doric Ventus Automated Chainwinders are the ultimate solution to

Let the breeze in.™

Doric Ventus Automated hardware provides a complete range of automated hardware for Residential and Commercial applications.

Running on a 24 Volt (DC) 'Plug & Play' system for added simplicity & reliability, the Automated Chainwinders are suitable for use with awning windows and provides an easy to install system that does not require an electrician to connect together.

Suiting a variety of chainwinder applications Doric Ventus Automated hardware can be used in floor to ceiling systems as well as those hard to reach areas.

PLUG&*PLAY* SYSTEM

The Doric Ventus 'Plug & Play' system consists of a simple range of controllers, switches and motors all connected via quick connect plugs.

The 'Plug & Play' system offers control for up to 8 windows and capable of operating electric chainwinders all at the same time.

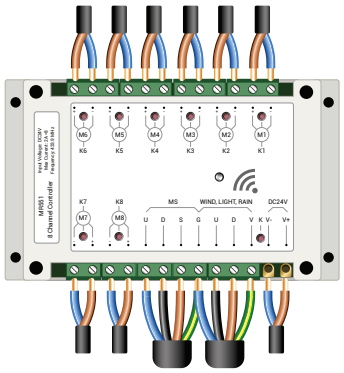

8 Channel Controller

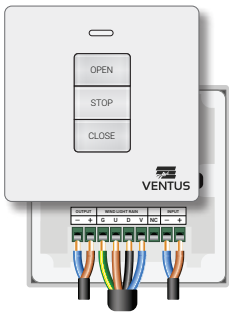

1 Channel Controller



2 Pin Plugs
Power and Motors



4 Pin Plugs
Accessories

WINDOW OPERATORS

A chainwinder is chosen based on the size and requirements of each window. Each channel on the controller can manage a single chainwinder or two chainwinders simultaneously using a Sync Lead with exception of the Twin Chainwinder.

POWER SUPPLY

Running on 24V DC, the system by design only requires a GPO or regular mains power outlet at the reach of the supplied power pack to plug into. Not needing an electrician to wire up all the hardware components is a key benefit of the Doric Ventus 'Plug & Play' system.

REMOTES & CONTROLS

One controller can be connected to an infinite number of switches and remotes, allowing you to put the controls where you want for absolute convenience.

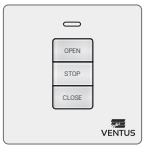

WT211
1-Channel wireless wall mounted switch



WT215
5-Channel wireless wall mounted switch



RT111
1-Channel wireless remote control



RT1116
16-Channel wireless remote control

AUTOMATED CONTROLS

A Wind Light Rain Sensor can be added to offer an automatic control when the weather turns undesirable. The system also alternatively allows to connect into the existing Building Management System (BMS) or C-BUS.





	SCE100S SHORT SINGLE	SCE300S SMALL SINGLE	LCD300 LARGE SINGLE	TCE300 LARGE TWIN
VOLTAGE	24V DC	24V DC	24V DC	24V DC
PUSH/PULL FORCE	250N	250N	400N	800N
CHAIN PROJECTION	100mm	300mm	300mm	300mm
WINDOW HEIGHT *(MAX.)*	1500mm	1500mm	1800mm	1800mm
WINDOW WIDTH *(MAX.)*	1200mm	1200mm	1200mm	2400mm
SASH WEIGHT *(MAX.)*	< 25kg	< 25kg	< 40kg	< 80kg
CHAIN	304 Stainless Steel	304 Stainless Steel	304 Stainless Steel	304 Stainless Steel

COLOURS

(Body colour only, excludes chain, cable & brackets)

CLEAR ANODISED

SATIN BLACK

PEARL WHITE

CUSTOM COLOURS AVAILABLE

TESTING

Performance tested to 30,000 cycles

IP32 RATED — When installed according to installation instructions

OPERATES ON ALL **BMS & C-BUS**

C TICK Certified

WATCH OUR VIDEO:
VENTUS AUTOMATED HARDWARE
YouTube *Alchin Long Group*

AUTO HARDWARE COMPONENTS

All the hardware you need and no confusion. The Doric Ventus range encompasses control units at the heart of the system, power supply, control pads and wireless remotes, automated sensors, leads, extensions, accessories and the window operator motors themselves. Doric also provides compressive wiring diagrams to aid in the 'Plug & Play' installation.

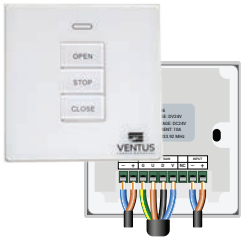

MR536
1-Channel control unit



MR551
8-Channel control unit



POWER PACK 2.5AMP
Mains power 240V AC
to 24V DC



POWER PACK 10AMP
Mains power 240V AC
to 24V DC



11PS2415 UPS
Battery backup power

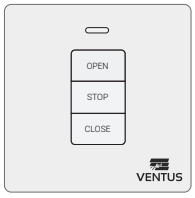

MS541
Wired wall mounted
switch



RT111
1-Channel wireless
remote control



RT1116
16-Channel wireless
remote control

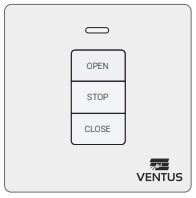

WT211
1-Channel wireless
wall mounted switch

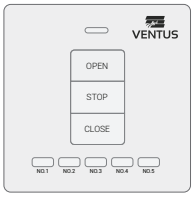

WT215
5-Channel wireless
wall mounted switch



WLR001
Wind Light Rain Sensor



C2075F01
2-Core female plug 100mm



C2075M01
2-Core male plug 100mm



C2075F3
2-Core female plug 3m



C2075M3
2-Core male plug 3m



C2075FM3
2-Core female-male plug 3m



C2075FM10
2-Core female-male plug 10m



C2075M10
2-Core male plug 10m



C405F3
4-Core female plug 3m



C405M3
4-Core male plug 3m



C405FM3
4-Core female-male plug 3m



S102P
Chainwinder SYNC Lead



C1F2M TEST LEAD
On-site test unit



Louvre OCP
Over Current Protection
*Included with Auto Louvre



Auto Louvre
102mm Blade



Auto Louvre
152mm Blade



SCE100s
Electric Winder 100mm chain



SCE300s
Electric Winder 300mm chain



LCD300
Electric Winder - 300mm chain



TCE300
Twin chain electric winder - 300mm chain

QUICK LAYOUT GUIDE

1 CHANNEL LAYOUT

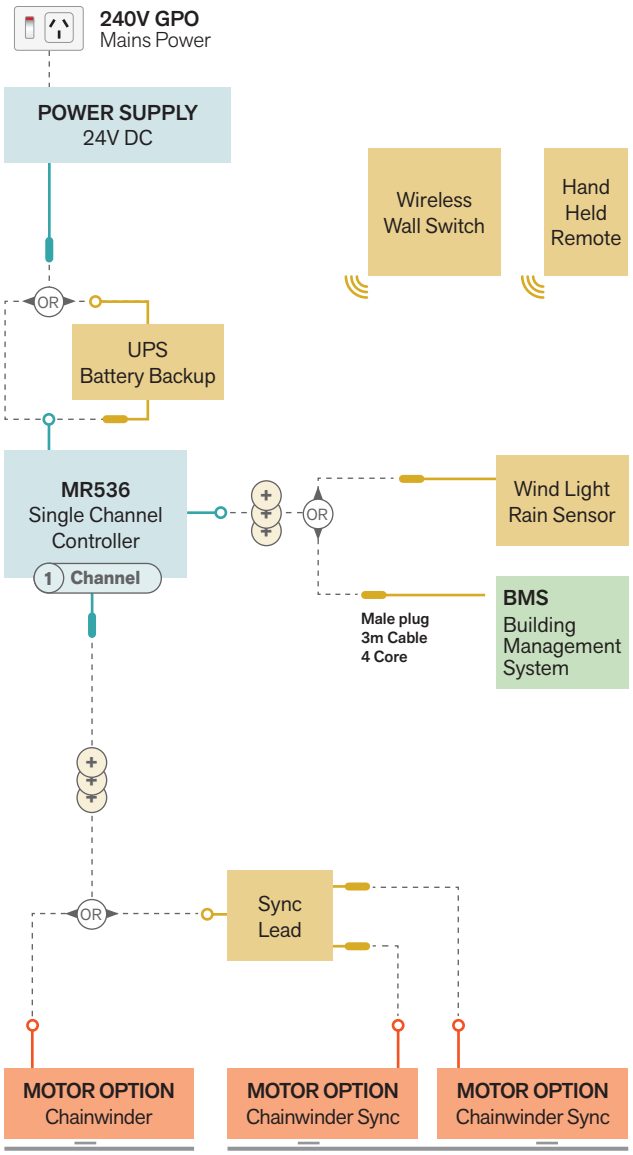

8 CHANNEL LAYOUT

(UP TO 8 WINDOWS FROM ONE CONTROLLER)

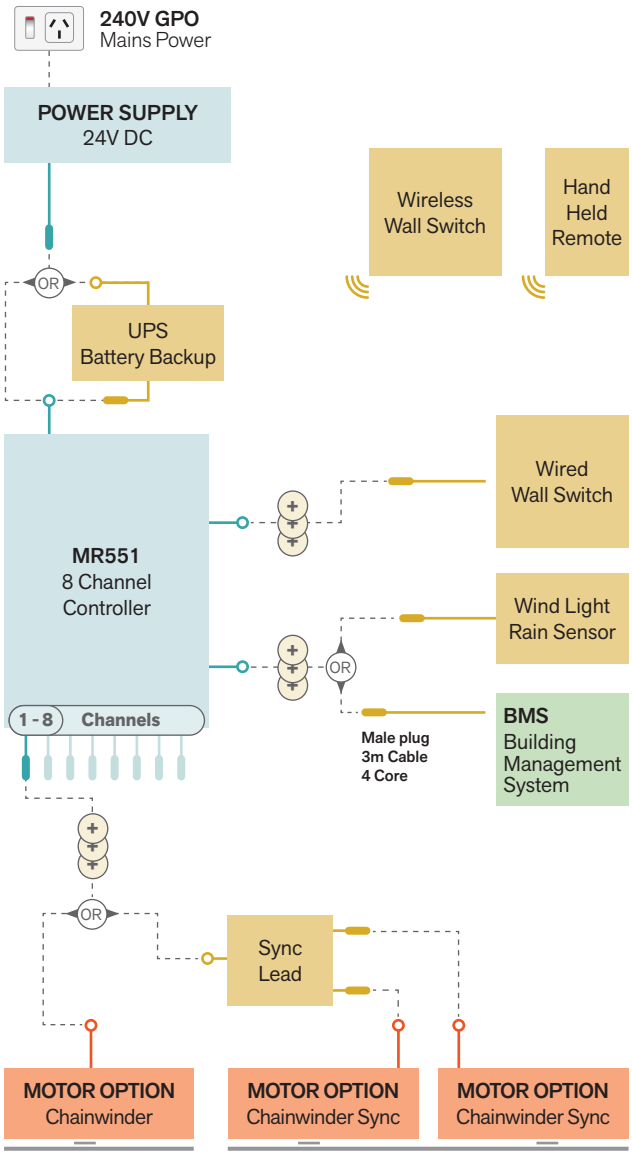

SELECTION REQUIREMENTS:

BASE/MINIMUM	For the system to work, these are the base required hardware.
EXTENSION OPTIONS	These items are added if required.
MOTOR OPTION	Chainwinder best suited for your window size & weight.

ADDITIONAL 'PLUG & PLAY' EXTENSION LEADS AVAILABLE

EITHER/OR OPTION

AVAILABLE CHANNELS
Repeat wiring per channel as required

IMPORTANT:

- System and Motors operate on 24V DC

1-4 Motors require 2.5amp Power Pack	**5+ Motors** require 10amp Power Pack

Note: TCE300 Twin Chainwinder uses two motors.

- Repeat wiring for each channel/window as required
- For Sync'd Chainwinders, utilise channels 1, 3, 5, 7
- TCE300 Twin Chainwinder ***not available*** for Sync
- Comprehensive electrical drawings and component lists are available on the Doric website.



SCE100S | SHORT SINGLE ELECTRIC CHAINWINDER

PRODUCT DETAILS	
VOLTAGE	24V DC
PUSH/PULL FORCE	250N
CHAIN PROJECTION	100mm
WINDOW HEIGHT *(MAX.)*	1500mm
WINDOW WIDTH *(MIN - MAX.)*	350mm - 1200mm
CHAIN	304 Stainless Steel
CODE	9052637 - SCE100S

The Doric Ventus SCE100s features a short 100mm chain projection. It is best suited for small and light weight awning windows up to 1200mm wide by 1500mm high. Capable of producing 250N of force, the electric chainwinder can operate a window up to 25kg in weight.



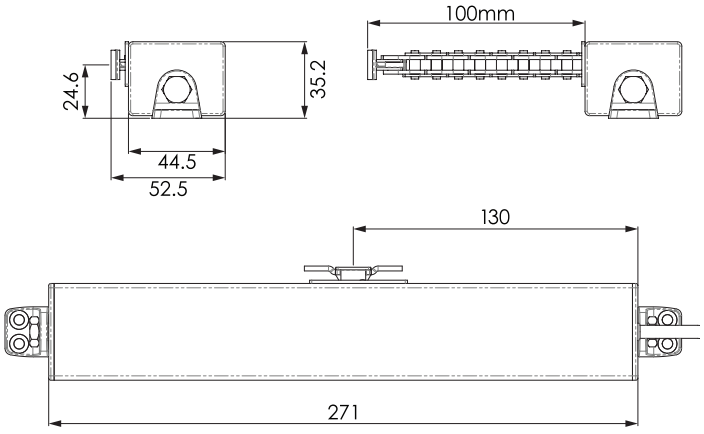



SCE300S | SMALL SINGLE ELECTRIC CHAINWINDER

PRODUCT DETAILS	
VOLTAGE	24V DC
PUSH/PULL FORCE	250N
CHAIN PROJECTION	300mm
WINDOW HEIGHT *(MAX.)*	1500mm
WINDOW WIDTH *(MIN - MAX.)*	350mm - 1200mm
CHAIN	304 Stainless Steel
CODE	9052809 - SCE300S

The Doric Ventus SCE300s offers a chain projection up to 300mm. Suited for small, light weight awning windows up to 1200mm wide by 1500mm high, it is capable of producing 250N of force operating a window up to 25kg in weight.



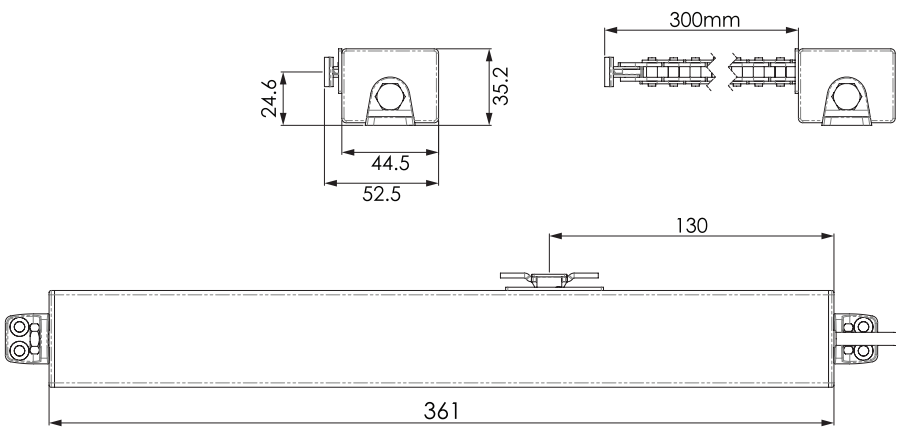



LCD300 | LARGE SINGLE ELECTRIC CHAINWINDER

PRODUCT DETAILS	
VOLTAGE	24V DC
PUSH/PULL FORCE	400N
CHAIN PROJECTION	300mm
WINDOW HEIGHT *(MAX.)*	1800mm
WINDOW WIDTH *(MIN - MAX.)*	410mm - 1200mm
CHAIN	304 Stainless Steel
CODE	9050601 - LCD300

The Doric Ventus LCD300 is a larger electric chainwinder featuring a 300mm chain projection and best suited for larger awning windows up to 1200mm wide by 1800mm high. Producing 400N of force, the electric chainwinder can operate a window up to 40kg in weight.



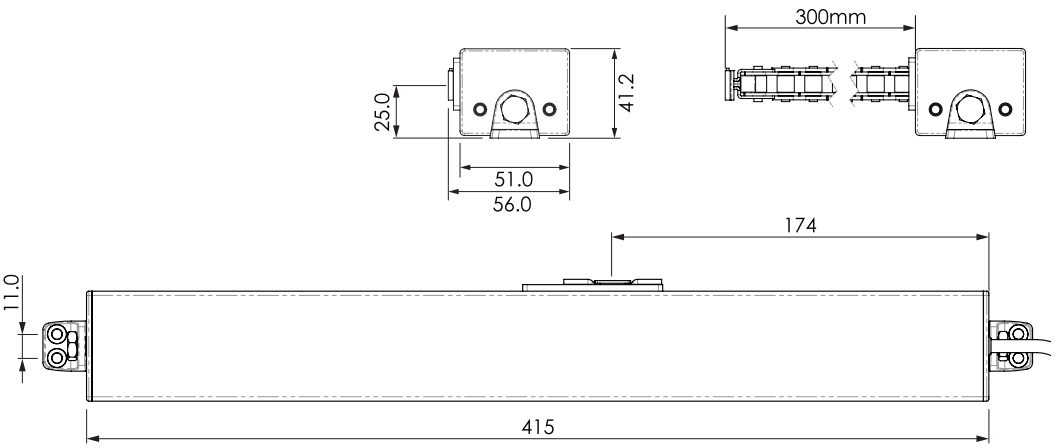



TCE300 | TWIN ELECTRIC CHAINWINDER

PRODUCT DETAILS	
VOLTAGE	24V DC
PUSH/PULL FORCE	800N
CHAIN PROJECTION	300mm
WINDOW HEIGHT *(MAX.)*	1800mm
WINDOW WIDTH *(MIN - MAX.)*	850mm - 2400mm
CHAIN	304 Stainless Steel
CODE	9050600 - TCE300

The Doric Ventus TCE300 is our twin chain electric winder featuring a dual 300mm chain projection. It offers operation for the largest windows measuring up to 2400mm wide by 1800mm high. The winder producing up to 800N of push/pull force is able to operate a window of up to 80kg in weight.

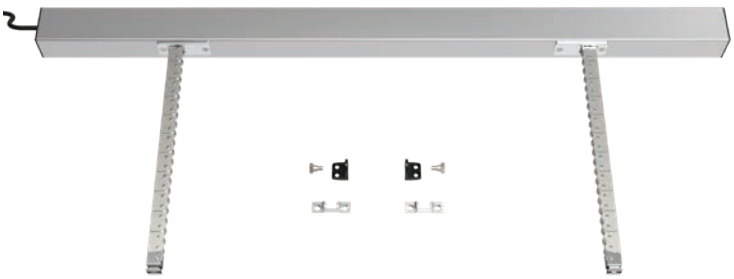

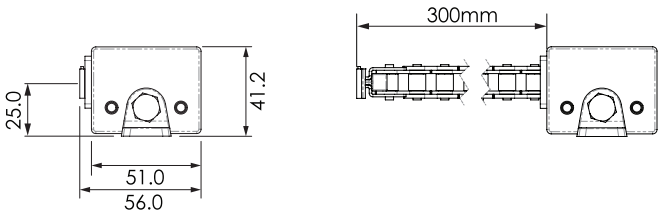

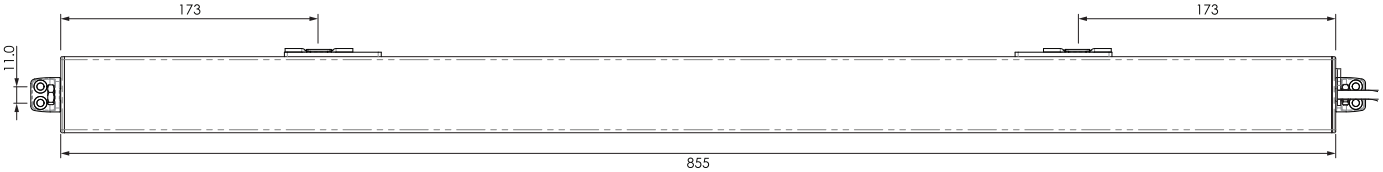

LINE DRAWINGS

SCE100S
SHORT SINGLE
ELECTRIC CHAINWINDER

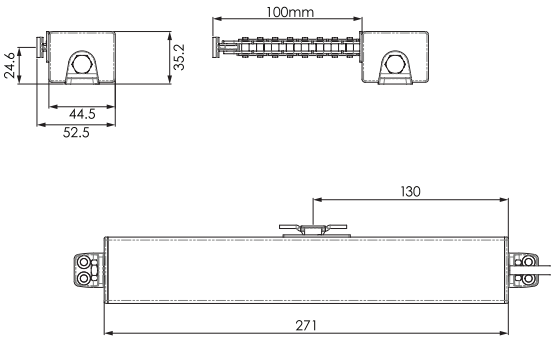

SCE300S
SMALL SINGLE
ELECTRIC CHAINWINDER

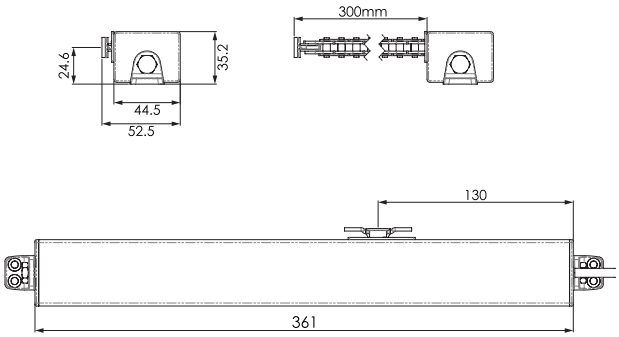

LCD300
LARGE SINGLE
ELECTRIC CHAINWINDER

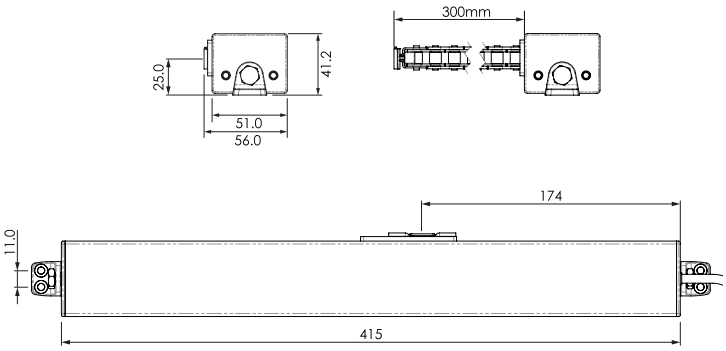

TCE300
TWIN
ELECTRIC CHAINWINDER

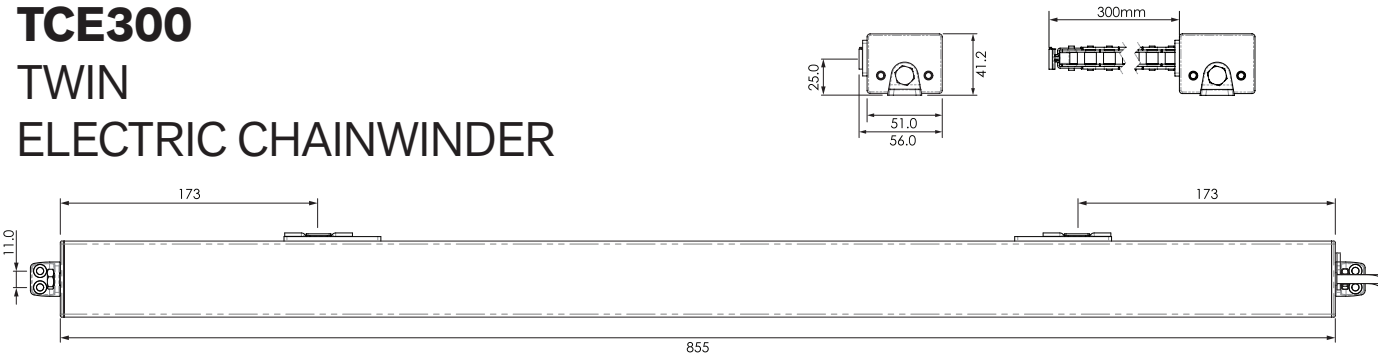

AUTOMATED CHAINWINDER SIZE CHART

Chainwinder	Height (max)	Width (max)	m² (max)	Weight < kg (no greater than)	Force of Motor
SCE100s	1500mm	*1200mm	1.8m2	< 25kgs	250N
SCE300s	1500mm	*1200mm	1.8m2	< 25kgs	250N
LCD300	1800mm	*1200mm	2.16m2	< 40kgs	400N
TCE300	1800mm	*2400mm	4.36m2	< 80kgs	800N
SCE100s + SCE100s SYNCHRONISED	1200mm	*2400mm	2.88m2	< 50kgs	*Combined* 500N
SCE300s + SCE300s SYNCHRONISED	1200mm	*2400mm	2.88m2	< 50kgs	*Combined* 500N
LCD300 + LCD300 SYNCHRONISED	1500mm	*2400mm	3.6m2	< 80kgs	*Combined* 800N

SYNCHRONISED refers to the addition of a synchroniser box plugged from a channel on the control box and operates two matching Automated Chainwinders through one channel simultaneously.

IMPORTANT:
Automated *Chainwinders are to be used with* ***Non-Friction Stays****. Friction Stays should not be used.*

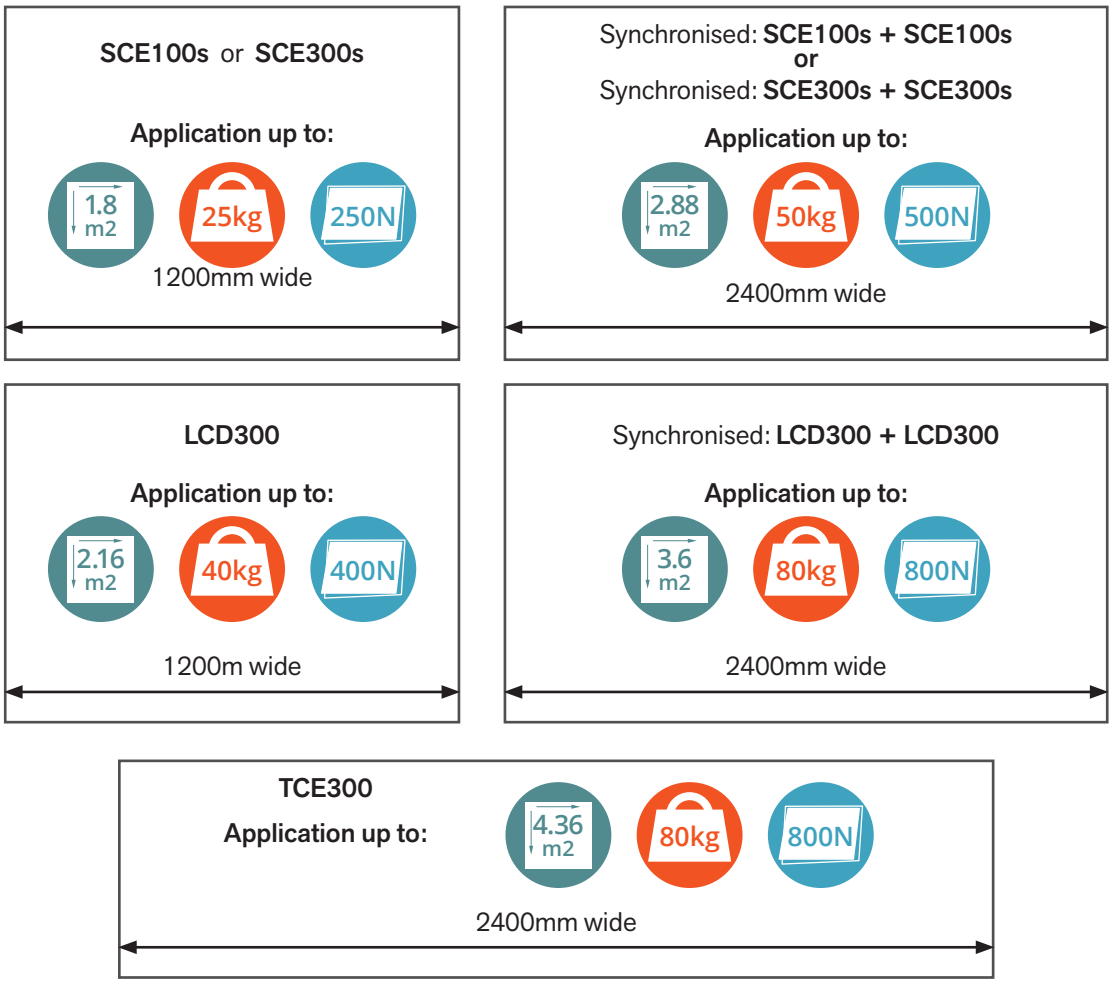

AUTOMATED CHAINWINDER WIRING

Chainwinder **Switch Unit**

Ventus chainwinders have an internal circuit board called a switch unit. This switch unit is not polarity sensitive, allowing the unit to run in either direction dependent on the signal sent and received.

+/– Runs open	–/+ Runs closed

If you press open on a remote or a BMS, the unit will receive a +/- signal to open the motor.

24V DC Switching Unit Wiring - **Circuit Setup**

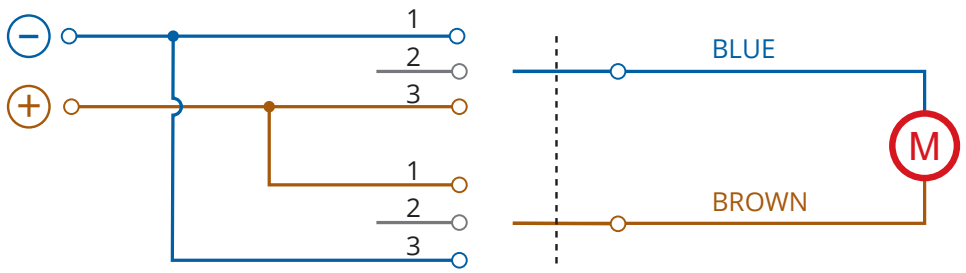

1 = +/– Runs open	**2 =** Stop	**3 =** –/+ Runs closed

Power **Supply**

1 to 4 Motors:
2.5 Amp Power Pack



5 to 8 Motors:
10 Amp Power Pack



Peak Amp **Guide**

SCE100s Standard Chain Electric	- Peak Amp 1.0 Amp – Normal – 0.4-0.6 Amp
SCE300s Standard Chain Electric	- Peak Amp 1.0 Amp – Normal – 0.4-0.6 Amp
LCD300 Large Chain Electric	- Peak Amp 2.8 Amp – Normal – 0.4-1.0 Amp
TCE300 Twin Chain Electric	- Peak Amp 5.6 Amp – Normal – 0.8-2.0 Amp

WIRING

The automation products operate off a 24V DC system and requires a minimum cable diameter of 0.75mm to reduce voltage loss over longer distances.

SYNCHRONISING
AUTOMATED CHAINWINDER

The Ventus Plug and Play system allows for a faster and more cost effective method of linking chainwinders together.

The Sync Lead guarantees that **both winders** will run in synchronisation. If a load related issue is detected, for example, one of the winders gets jammed or damaged, the protection circuit activates isolating the linked pair until the issue is resolved.

Ideally, the Sync Lead is fitted next to the controller allowing for ease of install, keeping the electrical components in one location.

Unlike other systems that use a network cable to achieve synchronisation, Ventus does not require additional components such as network adapters and does not require a separate power pack.

Applicable only to:
SCE100, SCE300 & LCD300
SCE300 + SCE300 Sync shown

Important: *When using a Sync Lead, refer to the correct schematic to ensure you're using the correct power pack*

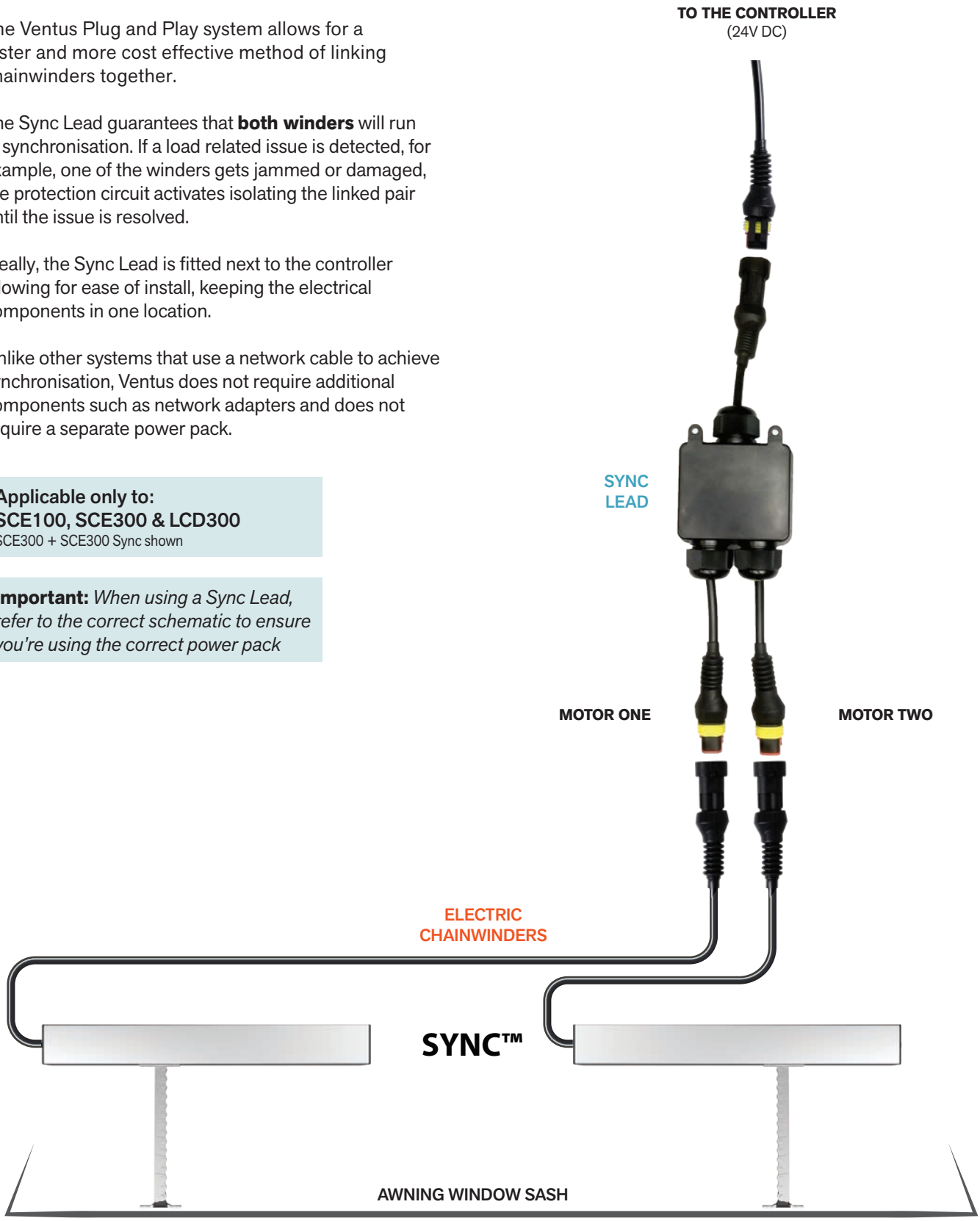

VENTUS I AUTOMATED CHAINWINDERS



WIRELESS CONTROL

Wireless Hand Held Remote and Wireless Wall Switch offers control from convenient locations and is easily paired to programmed controller unit.

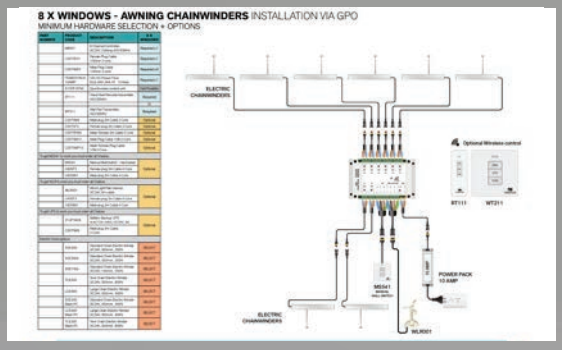

EASY TO FOLLOW COLOUR CHARTS

Installation is made a breeze with the easy to follow colour chart and wiring drawings.



QUICK CONNECT PLUGS

The Doric Ventus system connects fast and simple by the use of quick connect plugs.



NO ELECTRICIAN WIRING

Using quick connect plugs and a 12V DC power pack plugging into a general power outlet (GPO), the system does not require a licensed electrician to connect all the components.

Let the breeze in.™



LEFT OR RIGHT CABLE SIDED

The removable end caps enable the body to flip over providing the cable to be either on the left or right hand side of the winder body.



100mm & 300mm CHAIN STROKE

To help aid against child fall prevention and compliance, Auto Chainwinders offer 100mm & 300mm stroke to limit the openings.

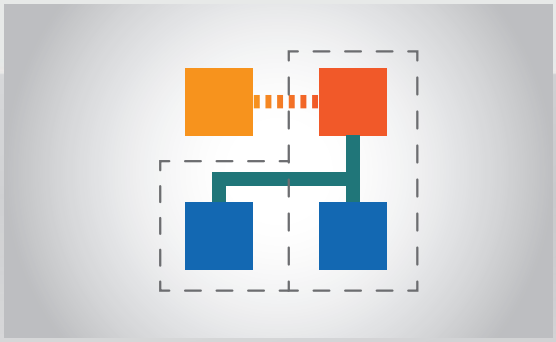

MULTIPLE INSTALLATION OPTIONS

The system can operate either standalone or integrate with BMS, C-BUS, & GPO installations, adding for flexibility of control and installation.

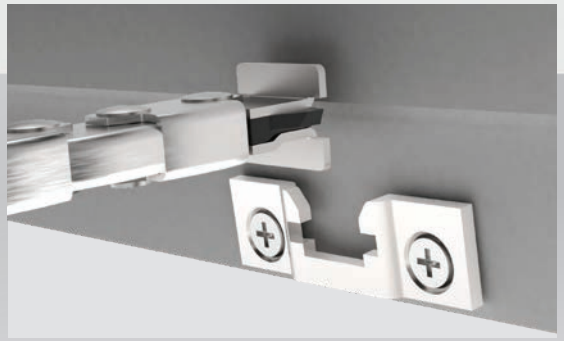

EASY LINK SASH PLATE

Attaching the sash chain is fast and easy with the Easy Link Sash Plate. Mount the plate brackets and clip-lock in the sash chain.

INNOVATORS
OF HARDWARE FOR WINDOWS AND DOORS

VENTUS_AUTO_CHAINWINDER_2021 v1.3 - 24.03.2021

SYDNEY
38 Redfern St,
Wetherill Park
Sydney, NSW 2164
Australia
Ph: +61 2 9609 2555
www.doric.com.au

AUCKLAND
26/C Triton Drive,
Albany, North Shore,
Auckland 0632
New Zealand
Ph: +64 9 415 5535
www.doric.co.nz

KUALA LUMPUR
No.17 Jalan 51/203A,
Kawasan Perindustrian Tiong Nam,
Seksyen 51, 46050 Petaling Jaya,
Selangor, Malaysia
Ph: +603 777 33 628
www.doric.com.my

ALCHIN LONG GROUP

Doric

VENTUS automation | AUTOMATED CHAINWINDERS