Doric




VENTUS
automation

# AUTOMATED
# HARDWARE RANGE

# Doric Ventus Automated Hardware are the ultimate solution to

## Let the breeze in.™

Doric Ventus Automated hardware provides a complete range of automated hardware for Residential and Commercial applications.

The range consists of Automated Chainwinders suitable for use with awning windows and motorised Auto Louvre Galleries, packaged into an easy to install system that does not require an electrician to wire. The 'Plug & Play' system runs on a 24V DC power supply for simplicity, reliability and ease of connection.

Suiting a variety of applications Doric Ventus Automated hardware can be used in floor to ceiling systems as well as those hard to reach areas.

## PLUG&*PLAY* SYSTEM

The Doric Ventus 'Plug & Play' system consists of a simple range of controllers, switches and motors all connected via quick connect plugs.

The 'Plug & Play' system offers control for up to 8 windows and capable of operating the window operator motors all at the same time.

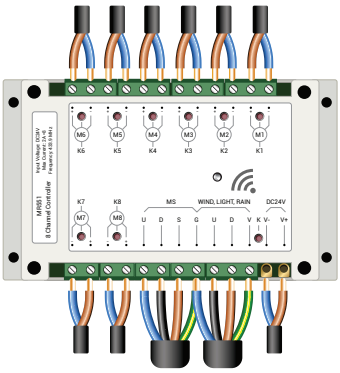

**MR551**
8 Channel Controller

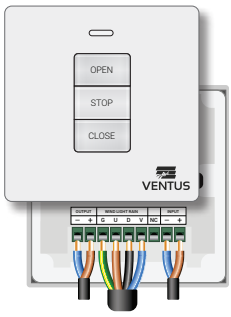


**MR536**
1 Channel Controller



**2 Pin Plugs**
*Power and Motors*



**4 Pin Plugs**
*Accessories*

## **REMOTES** & CONTROLS

One controller can be connected to an infinite number of switches and remotes, allowing you to put the controls where you want for absolute convenience.

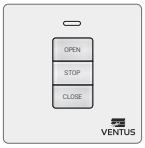


**WT211**
1-Channel wireless wall mounted switch

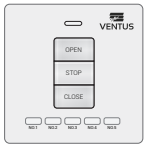


**WT215**
5-Channel wireless wall mounted switch




**RT111**
1-Channel wireless remote control




**RT1116**
16-Channel wireless remote control

## **POWER** SUPPLY

Running on 24V DC, the system by design only requires a GPO or regular mains power outlet at the reach of the supplied power pack to plug into. A key benefit the Doric Ventus 'Plug & Play' system offers is no need for an electrician to wire up the hardware components.



**2.5A Power Pack**



**10A Power Pack**

## **AUTOMATED** CONTROLS

A Wind Light Rain Sensor can be added to offer an automatic control when the weather turns undesirable. The system also alternatively allows to connect into the existing Building Management System (BMS) or C-BUS.



**WLR001**
Wind, Light, Rain Sensor

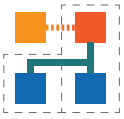

**BMS & C-BUS Integration**



# **WINDOW** OPERATORS

Doric's Ventus Auto Hardware range provides a host of motor options. The choice is simply down to the type and size of the window be it a Ventus Louvre Gallery or electric chainwinders for awning or casement windows.

**WATCH OUR VIDEO:**
*VENTUS AUTOMATED HARDWARE*
YouTube *Alchin Long Group*

## **AUTO** LOUVRE GALLERIES



Ventus Auto Louvre Galleries are a complete window solution, offering the frame, louvre blades and motorisation, all complete ready for on-site installation.

## **AUTO** CHAINWINDERS



Auto Chainwinders are a great option for new and existing awning and casement windows. Most window sizes are covered thanks to a range of motor options to choose from,

# **AUTO HARDWARE** COMPONENTS

All the hardware you need and no confusion. The Doric Ventus range encompasses control units at the heart of the system, power supply, control pads and wireless remotes, automated sensors, leads, extensions, accessories and the window operator motors themselves. Doric also provides compressive wiring diagrams to aid in the 'Plug & Play' installation.

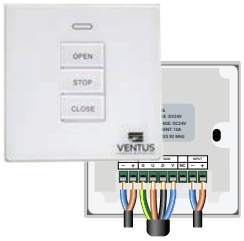


**MR536**
1-Channel control unit




**MR551**
8-Channel control unit



**POWER PACK 2.5AMP**
Mains power 240V AC
to 24V DC



**POWER PACK 10AMP**
Mains power 240V AC
to 24V DC




**11PS2415 UPS**
Battery backup power

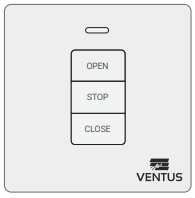


**MS541**
Wired wall mounted
switch




**RT111**
1-Channel wireless
remote control




**RT1116**
16-Channel wireless
remote control

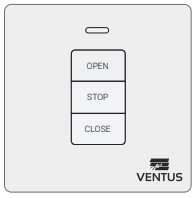


**WT211**
1-Channel wireless
wall mounted switch

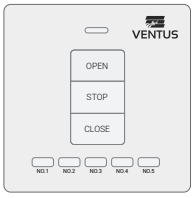


**WT215**
5-Channel wireless
wall mounted switch



**WLR001**
Wind Light Rain Sensor



**C2075F01**
2-Core female plug 100mm



**C2075M01**
2-Core male plug 100mm



**C2075F3**
2-Core female plug 3m



**C2075M3**
2-Core male plug 3m



**C2075FM3**
2-Core female-male plug 3m



**C2075FM10**
2-Core female-male plug 10m



**C2075M10**
2-Core male plug 10m



**C405F3**
4-Core female plug 3m



**C405M3**
4-Core male plug 3m



**C405FM3**
4-Core female-male plug 3m



**S102P**
Chainwinder SYNC Lead



**C1F2M TEST LEAD**
On-site test unit



**Louvre OCP**
Over Current Protection
*Included with Auto Louvre



**Auto Louvre**
**102mm Blade**



**Auto Louvre**
**152mm Blade**



**SCE100s**
Electric Winder 100mm chain



**SCE300s**
Electric Winder 300mm chain



**LCD300**
Electric Winder - 300mm chain



**TCE300**
Twin chain electric winder - 300mm chain

# QUICK LAYOUT GUIDE

## 1 CHANNEL LAYOUT

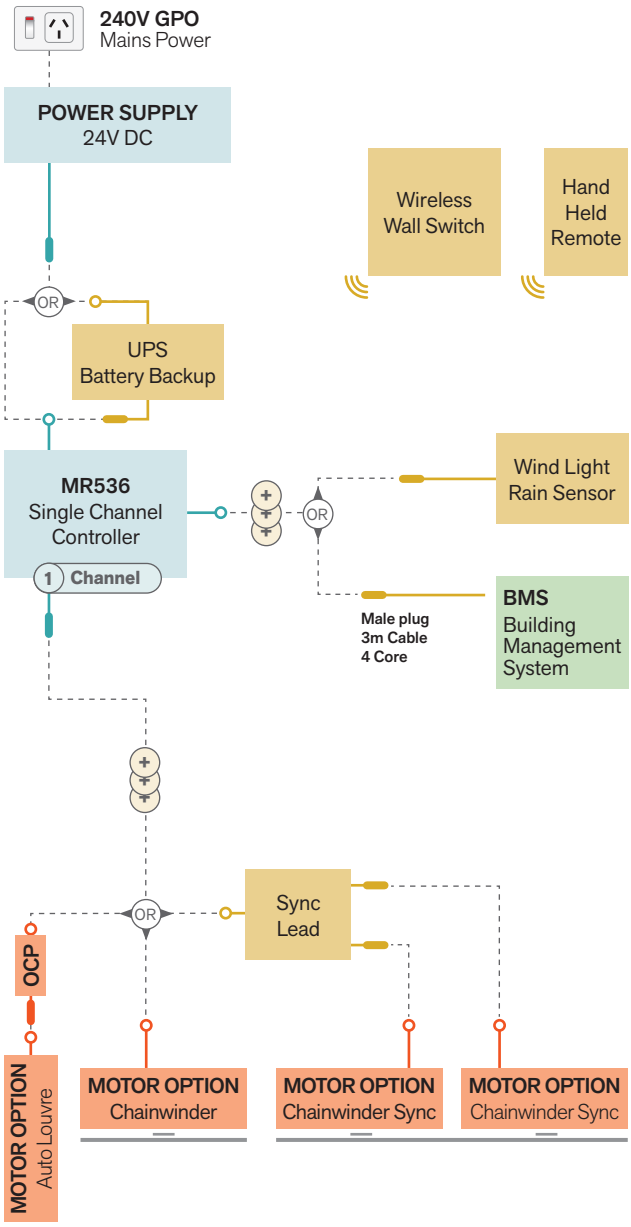


## 8 CHANNEL LAYOUT

(UP TO 8 WINDOWS FROM ONE CONTROLLER)

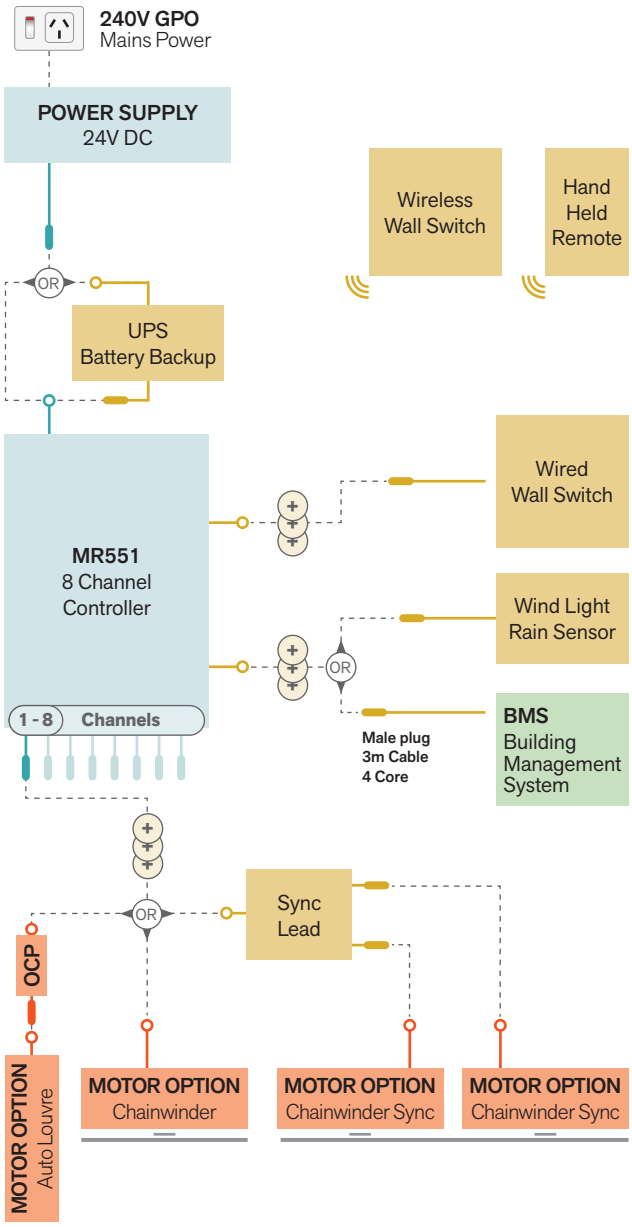


## SELECTION REQUIREMENTS:

| | |
|---|---|
| BASE/MINIMUM | For the system to work, these are the base required hardware. |
| EXTENSION OPTIONS | These items are added if required. |
| MOTOR OPTION | Your selected automated window motor option. |

**ADDITIONAL 'PLUG & PLAY' EXTENSION LEADS AVAILABLE**

**EITHER/OR OPTION**

**AVAILABLE CHANNELS**
Repeat wiring per channel as required

## IMPORTANT:

- System and Motors operate on 24V DC

| | |
|---|---|
| **1-4 Motors** require 2.5amp Power Pack | **5+ Motors** require 10amp Power Pack |

*Note: TCE300 Twin Chainwinder uses two motors.*

- Repeat wiring for each channel/window as required
- For Sync'd Chainwinders, utilise channels 1, 3, 5, 7
- TCE300 Twin Chainwinder ***not available*** for Sync
- Comprehensive electrical drawings and component lists are available on the Doric website.



# **VENTUS** I AUTOMATED LOUVRE GALLERIES

Though louvre design has changed a great deal since their early days, one thing has remained constant... louvres are the only window system that gives you the 100% opening advantage. This means louvres are the most practical window system when it comes to taking advantage of breezes and natural ventilation.

By design, louvres offer the least resistance to air flow. Open them for the full breeze effect, tilt them for ventilation even on a rainy day, or simply close them to seal the home and protect it from elements.

The practicality of louvres mean that they can be used anywhere or better yet, everywhere. Use louvres to open up a room or the entire house to fresh air and cool breezes. Cooling and ventilating your home with fresh, natural breezes is not only healthy, but also energy efficient. So you save money whilst doing your bit for the environment.

## **100%** OPENING ADVANTAGE

Louvres gives you the 100% opening advantage. By design, louvres offer the least resistance to air flow. Open them for the full breeze effect, tilt them for ventilation even on a rainy day, or simply close them to seal the home and protect it from elements.



## **COLOUR** OPTIONS

(Gallery Channel and Blade Clips only, excludes glass)

- SATIN BLACK
- SILVER
- PEARL WHITE
- CUSTOM COLOURS AVAILABLE

# **VENTUS** | AUTOMATED LOUVRE GALLERIES

## IT'S ALL IN **THE NAME**

**V**ent, the 100% opening advantage

**E**rgonomic handle design

**N**on-Scratch UV stabilised powder coat

**T**ested to meet AS4420 test methods and passed AS/NZS2047-2014

**U**V stabilised state-of-the-art polymer components

**S**leek and elegant design when opened and closed

## FEATURES

- Made from non-toxic, environmentally friendly, UV stabilised, non-corrosive and resilient materials
- Window restriction compliant
- Tested, passed and certified under the most stringent Australian tests
- 6 Year warranty
- Automated louvre version available

## ADVANTAGES

- Energy efficient louvre windows for maximum energy savings
- Highest performing standard louvre product in Australia
- Offset clips allow clearance of screens when installed in commercial main frame

IP32 RATED When installed according to installation instructions

OPERATES ON ALL **BMS & C-BUS**

**C TICK Certified**

# **BLADE** SIZES

Ventus Louvres are available in two sizes, 152mm blade and 102mm blade. These sizes offer a different aesthetic whilst offering the same ventilation characteristics. Both are suitable for insect or security screening and allow the blades to be fully opened.

### 102mm Series



### 152mm Series

The 152mm blade clip features a exclusive pivot location that offsets the glass internally to the inside of the building so standard commercial frames can be used. This features means the same frame can be used on both windows and doors.



# **GALLERY HEIGHTS** & MOTOR LOCATION

## **VENTUS** LOUVRE GALLERY *102mm* ***AUTO***

| NO. OF BLADES | GALLERY HEIGHT |
|---|---|
| 31 | 2831mm |
| 30 | 2741mm |
| 29 | 2651mm |
| 28 | 2561mm |
| 27 | 2471mm |
| 26 | 2381mm |
| 25 | 2291mm |
| 24 | 2201mm |
| 23 | 2111mm |
| 22 | 2021mm |
| 21 | 1931mm |
| 20 | 1841mm |
| 19 | 1751mm |
| 18 | 1661mm |
| 17 | 1571mm |
| 16 | 1481mm |
| 15 | 1391mm |
| 14 | 1301mm |
| 13 | 1211mm |
| 12 | 1121mm |
| 11 | 1031mm |
| 10 | 941mm |
| 9 | 851mm |
| 8 | 761mm |
| 7 | 671mm |
| 6 | 581mm |
| 5 | 491mm |
| 4 | 401mm |
| 3 | 311mm |

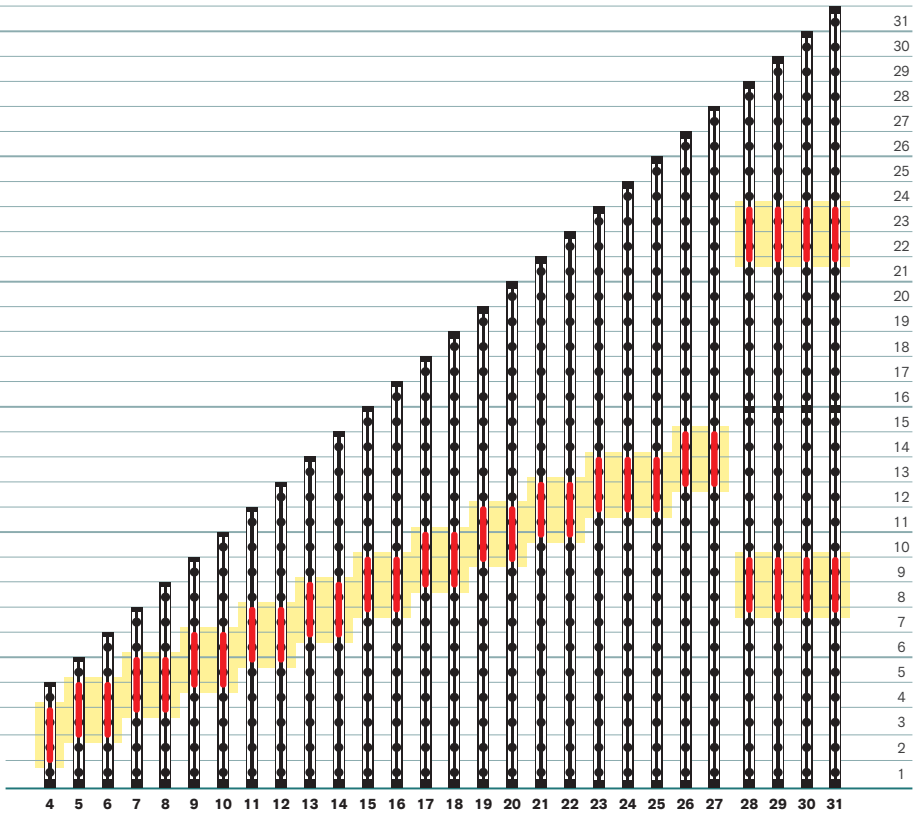


Working: Ventus Gallery Heights 102 Std 3-31 1:3 | PDF export version: 1.5

## **VENTUS** LOUVRE GALLERY *152mm* ***AUTO***

| NO. OF BLADES | GALLERY HEIGHT |
|---|---|
| 21 | 2980mm |
| 20 | 2840mm |
| 19 | 2700mm |
| 18 | 2560mm |
| 17 | 2420mm |
| 16 | 2280mm |
| 15 | 2140mm |
| 14 | 2000mm |
| 13 | 1860mm |
| 12 | 1720mm |
| 11 | 1580mm |
| 10 | 1440mm |
| 9 | 1300mm |
| 8 | 1160mm |
| 7 | 1020mm |
| 6 | 880mm |
| 5 | 740mm |
| 4 | 600mm |
| 3 | 460mm |
| 2 | 320mm |

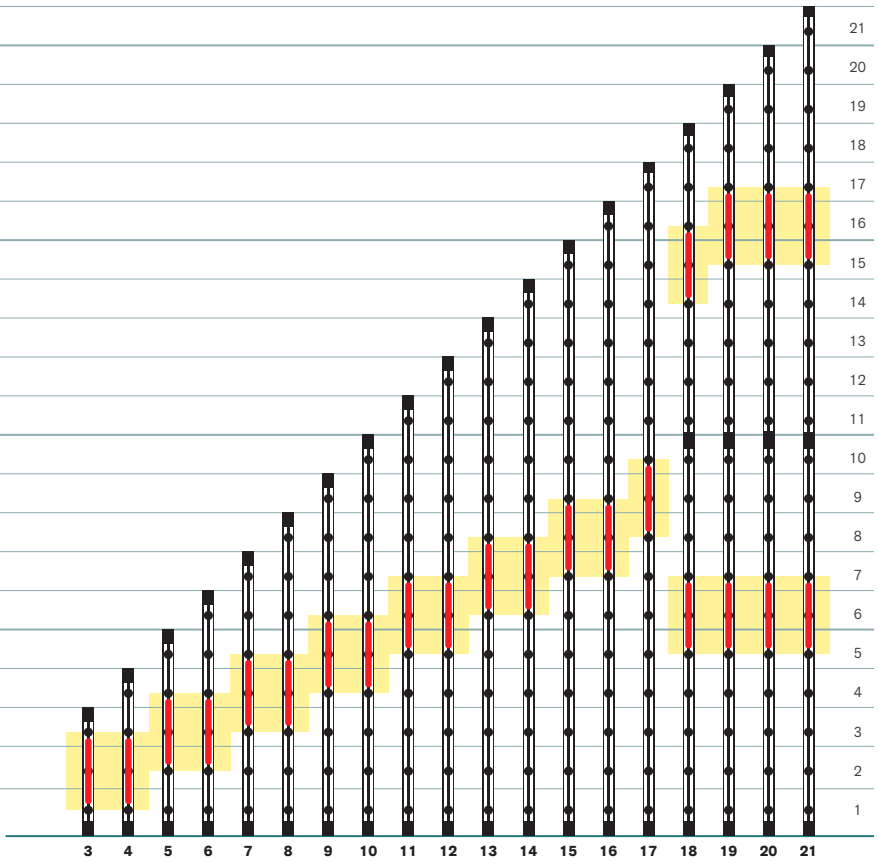


Working: Ventus Gallery Heights 152 Std 2-21 1:3 | PDF export version: 1.5

**MOTOR LOCATION**

**Note:**
Heights greater then the heights displayed are possible as engineered solutions

# **AUTO LOUVRE** & OCP

An OCP (Over Current Protection) is a device that plugs in line directly to the Auto Louvre motor offering protection from damage.

In part owing to the louvre motors compact design and needing to fit within the gallery frame, the OCP is a separate device. It is recommended to be installed in the cavity next to the Control Box (controller) making it easier to access, troubleshooting faults, or swapping out a damaged unit.

The OCP operates like a fuse, designed to be a last line of defense to stop over current surges and spikes from reaching the motor. In the event this happens, the motor will temporarily not work until the OCP is replaced. The great advantage in protecting it like this avoids requiring extensive disassembly of the glass and galleries to access the motor for replacement. It's a matter of unplug and reinstall the OCP by the controller.

Every Auto Louvre motor requires a Over Current Protection (OCP) and one is supplied with every motor.

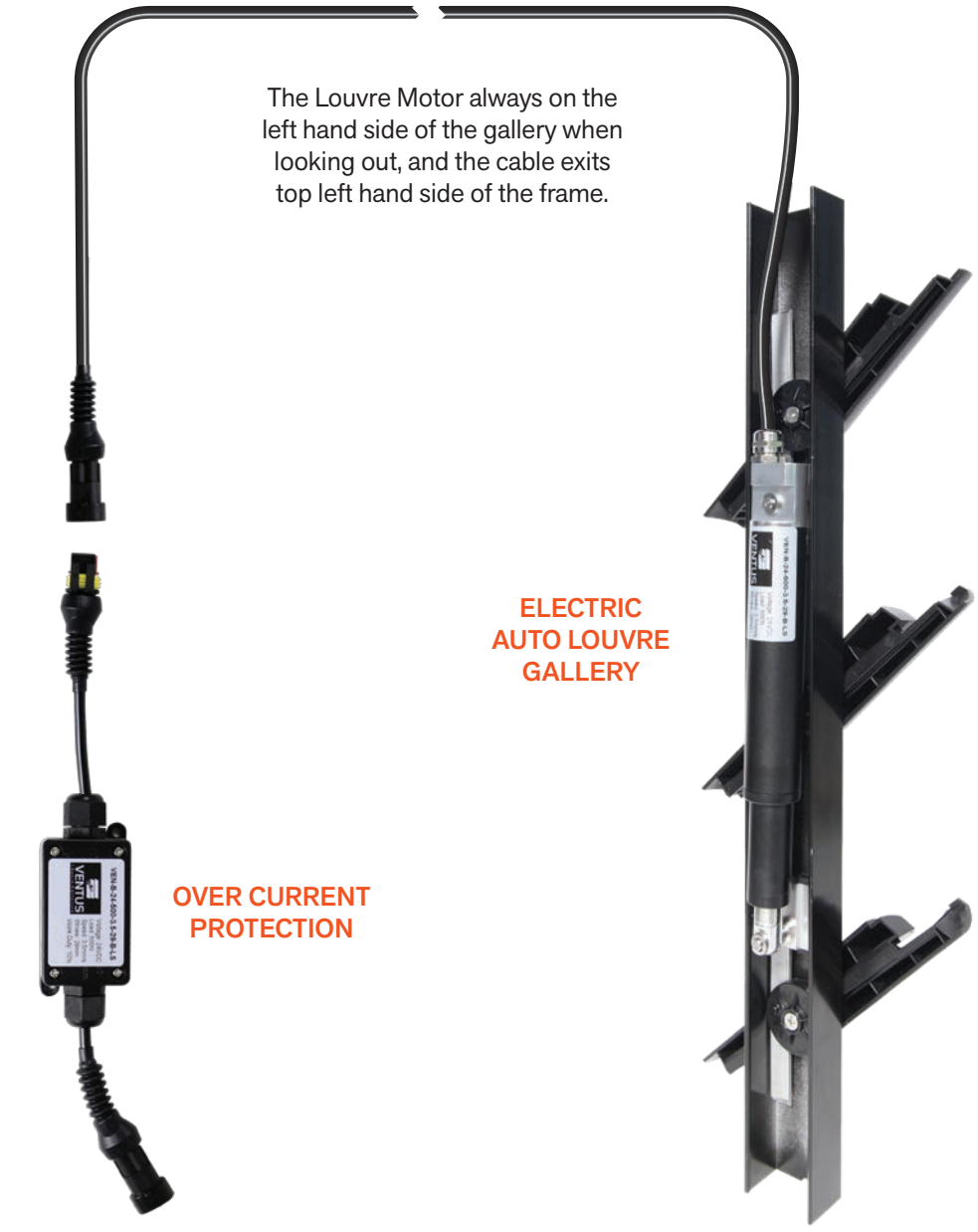

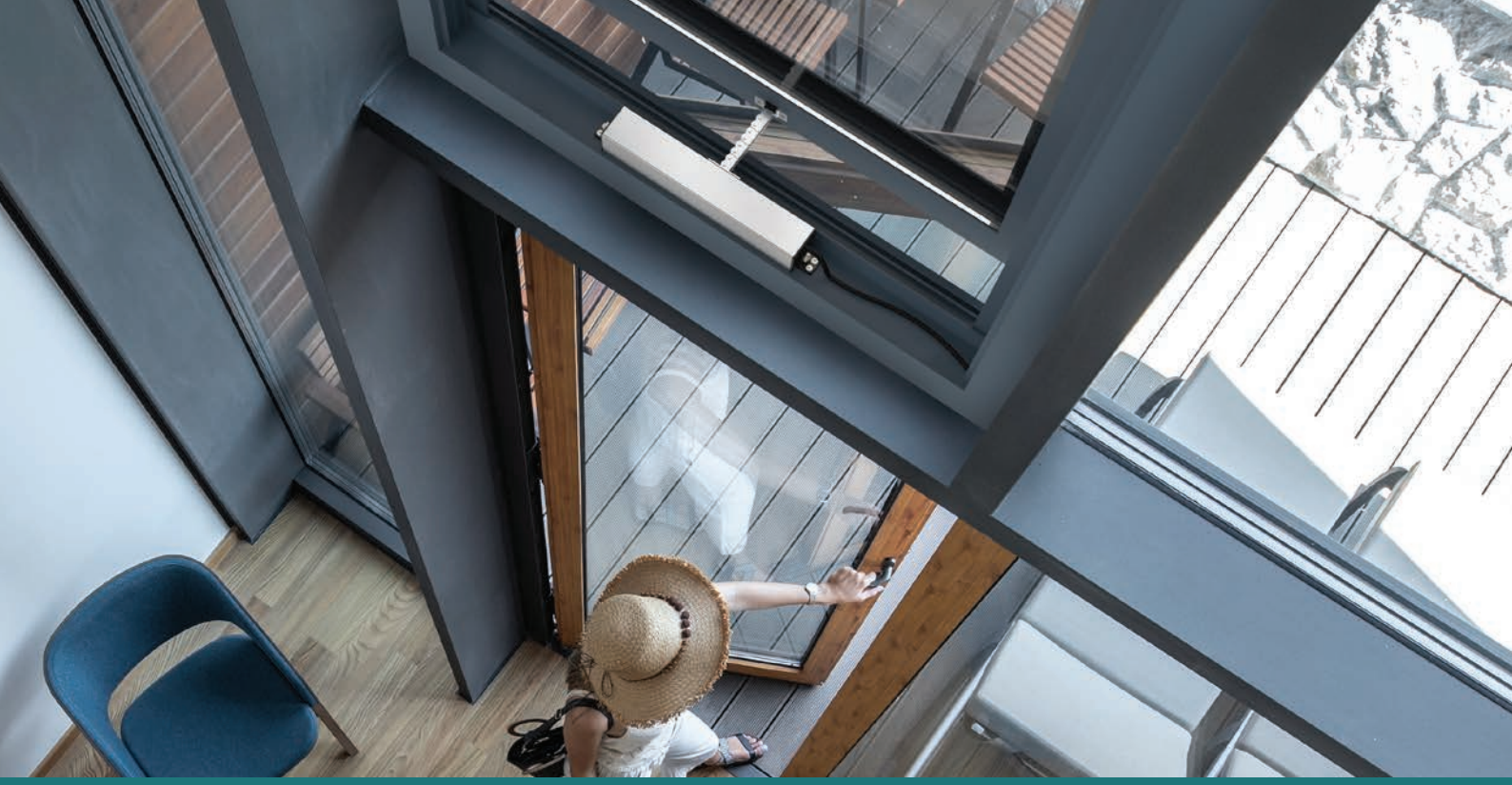

# **VENTUS** I AUTOMATED CHAINWINDERS

A Ventus Electric Chainwinder is a great option for both existing and new awning windows with the majority of window sizes covered. From small to medium windows using the SCE300s in most residential applications, and LCD300 and TCE300 for the larger commercial installations. For compliance with Fall Prevention and 'Kids Don't Fly' requirements, the short 100mm chain is available with the SCE100s for safety and peace of mind.

## **COLOUR** OPTIONS

(Body colour only, excludes chain, cable & brackets)

- CLEAR ANODISED
- SATIN BLACK
- PEARL WHITE
- CUSTOM COLOURS AVAILABLE

## TESTING

Performance tested to 30,000 cycles



IP32 RATED — When installed according to installation instructions

OPERATES ON ALL **BMS & C-BUS**

**C TICK Certified**

# **VENTUS** | AUTOMATED CHAINWINDERS



| | SCE100S<br>SHORT SINGLE | SCE300S<br>SMALL SINGLE | LCD300<br>LARGE SINGLE | TCE300<br>LARGE TWIN |
|---|---|---|---|---|
| **VOLTAGE** | 24V DC | 24V DC | 24V DC | 24V DC |
| **PUSH/PULL FORCE** | 250N | 250N | 400N | 800N |
| **CHAIN PROJECTION** | 100mm | 300mm | 300mm | 300mm |
| **WINDOW HEIGHT** *(MAX.)* | 1500mm | 1500mm | 1800mm | 1800mm |
| **WINDOW WIDTH** *(MAX.)* | 1200mm | 1200mm | 1200mm | 2400mm |
| **SASH WEIGHT** *(MAX.)* | < 25kg | < 25kg | < 40kg | < 80kg |
| **CHAIN** | 304 Stainless Steel | 304 Stainless Steel | 304 Stainless Steel | 304 Stainless Steel |
| **SYNC** | **SCE100S+SCE100S** | **SCE300S+SCE300S** | **LCD300+LCD300** | |
| **PUSH/PULL FORCE** | 500N | 500N | 800N | |
| **WINDOW HEIGHT** *(MAX.)* | 1200mm | 1200mm | 1500mm | |
| **WINDOW WIDTH** *(MAX.)* | 2400mm | 2400mm | 2400mm | |
| **SASH WEIGHT** *(MAX.)* | < 50kgs | < 50kgs | < 80kgs | |



**SYNCHRONISED** refers to the addition of a synchroniser box plugged from a channel on the control box and operates two matching Automated Chainwinders through one channel simultaneously.

**IMPORTANT:**
Automated *Chainwinders are to be used with* ***Non-Friction Stays****. Friction Stays should not be used.*

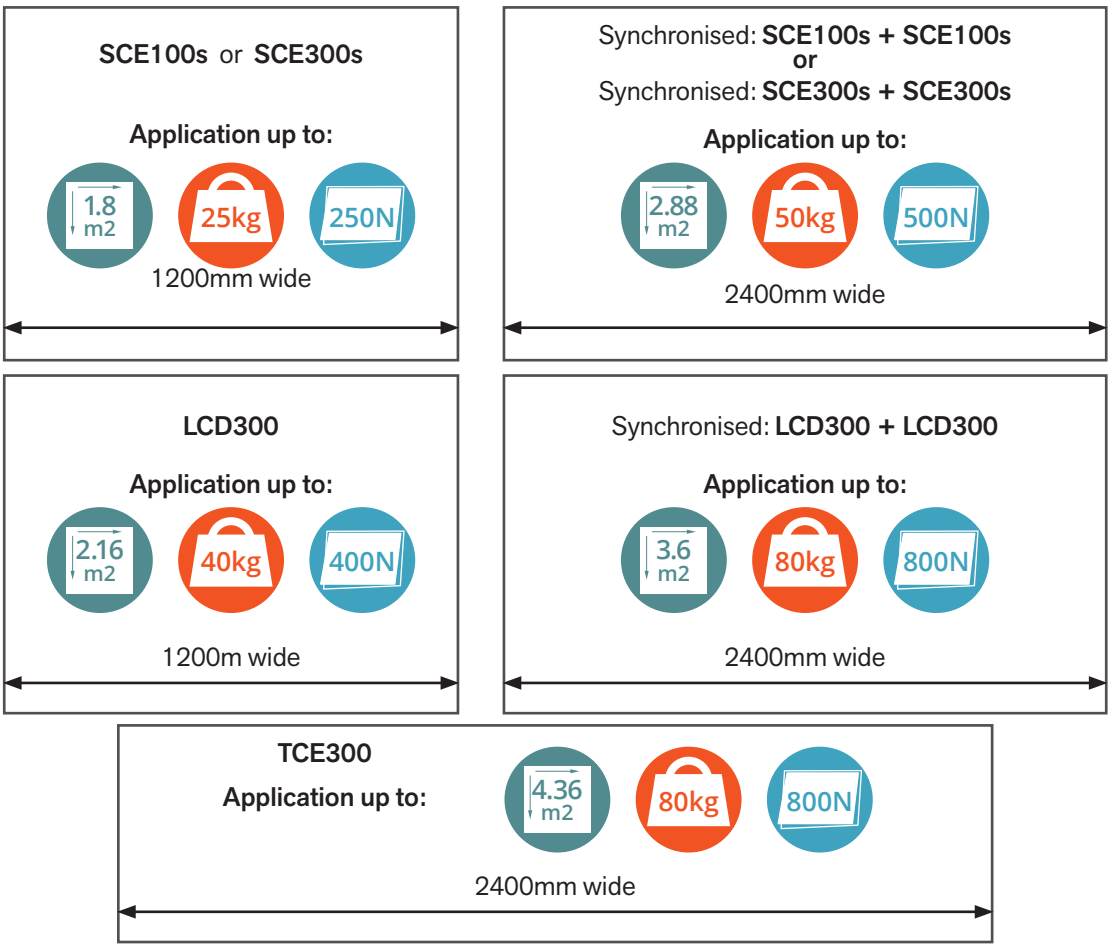

# **VENTUS** I AUTOMATED CHAINWINDERS




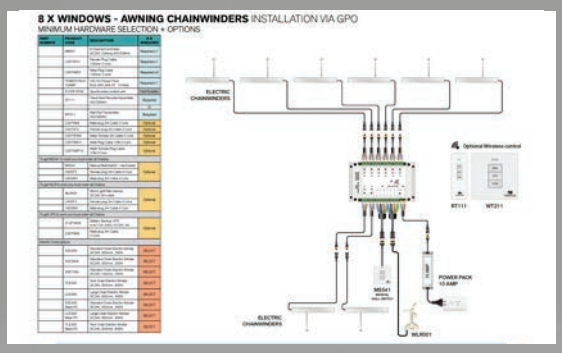


## WIRELESS CONTROL

Wireless Hand Held Remote and Wireless Wall Switch offers control from convenient locations and is easily paired to programmed controller unit.

## EASY TO FOLLOW COLOUR CHARTS

Installation is made a breeze with the easy to follow colour chart and wiring drawings.





## QUICK CONNECT PLUGS

The Doric Ventus system connects fast and simple by the use of quick connect plugs.

## NO ELECTRICIAN WIRING

Using quick connect plugs and a 24V DC power pack plugging into a general power outlet (GPO), the system does not require a licensed electrician to connect all the components.

# Let the breeze in.™



## LEFT OR RIGHT CABLE SIDED

The removable end caps enable the body to flip over providing the cable to be either on the left or right hand side of the winder body.



## 100mm & 300mm CHAIN STROKE

To help aid against child fall prevention and compliance, Auto Chainwinders offer 100mm & 300mm stroke to limit the openings.

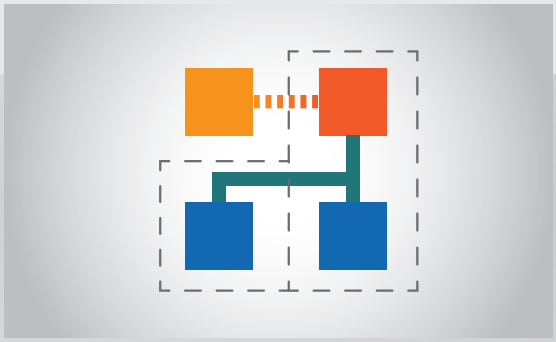

## MULTIPLE INSTALLATION OPTIONS

The system can operate either standalone or integrate with BMS, C-BUS, & GPO installations, adding for flexibility of control and installation.

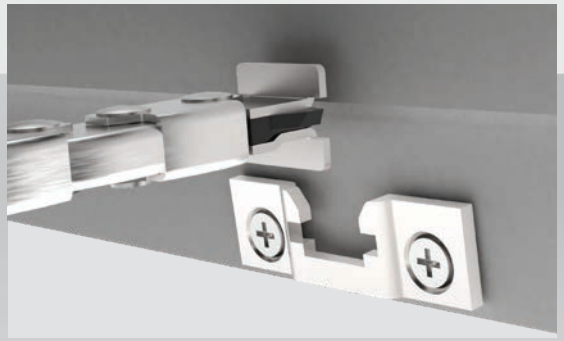

## EASY LINK SASH PLATE

Attaching the sash chain is fast and easy with the Easy Link Sash Plate. Mount the plate brackets and clip-lock in the sash chain.



# **SCE100S** | SHORT SINGLE ELECTRIC CHAINWINDER

| PRODUCT DETAILS | |
|---|---|
| **VOLTAGE** | 24V DC |
| **PUSH/PULL FORCE** | 250N |
| **CHAIN PROJECTION** | 100mm |
| **WINDOW HEIGHT** *(MAX.)* | 1500mm |
| **WINDOW WIDTH** *(MIN - MAX.)* | 350mm - 1200mm |
| **CHAIN** | 304 Stainless Steel |
| **CODE** | 9052637 - SCE100S |

The Doric Ventus SCE100s features a short 100mm chain projection. It is best suited for small and light weight awning windows up to 1200mm wide by 1500mm high. Capable of producing 250N of force, the electric chainwinder can operate a window up to 25kg in weight.



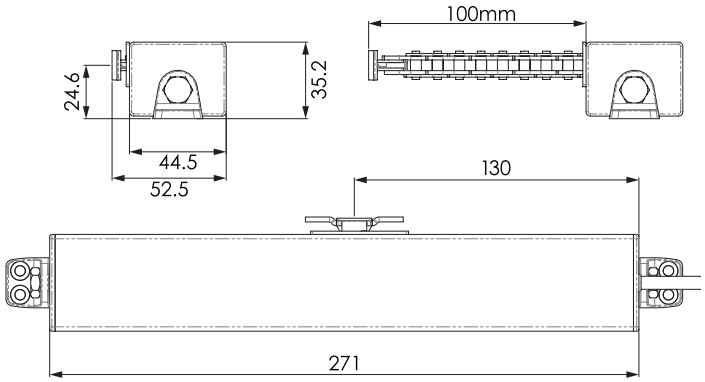



# **SCE300S** | SMALL SINGLE ELECTRIC CHAINWINDER

| PRODUCT DETAILS | |
|---|---|
| **VOLTAGE** | 24V DC |
| **PUSH/PULL FORCE** | 250N |
| **CHAIN PROJECTION** | 300mm |
| **WINDOW HEIGHT** *(MAX.)* | 1500mm |
| **WINDOW WIDTH** *(MIN - MAX.)* | 350mm - 1200mm |
| **CHAIN** | 304 Stainless Steel |
| **CODE** | 9052809 - SCE300S |

The Doric Ventus SCE300s offers a chain projection up to 300mm. Suited for small, light weight awning windows up to 1200mm wide by 1500mm high, it is capable of producing 250N of force operating a window up to 25kg in weight.



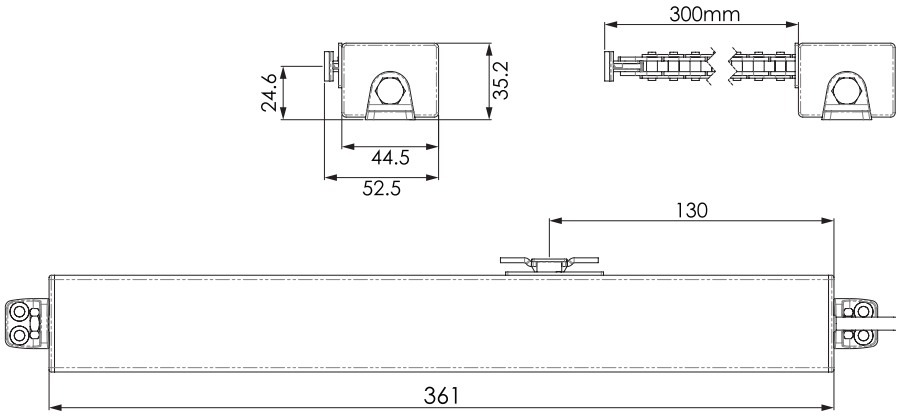



# **LCD300** | LARGE SINGLE ELECTRIC CHAINWINDER

| PRODUCT DETAILS | |
|---|---|
| **VOLTAGE** | 24V DC |
| **PUSH/PULL FORCE** | 400N |
| **CHAIN PROJECTION** | 300mm |
| **WINDOW HEIGHT** *(MAX.)* | 1800mm |
| **WINDOW WIDTH** *(MIN - MAX.)* | 410mm - 1200mm |
| **CHAIN** | 304 Stainless Steel |
| **CODE** | 9050601 - LCD300 |

The Doric Ventus LCD300 is a larger electric chainwinder featuring a 300mm chain projection and best suited for larger awning windows up to 1200mm wide by 1800mm high. Producing 400N of force, the electric chainwinder can operate a window up to 40kg in weight.



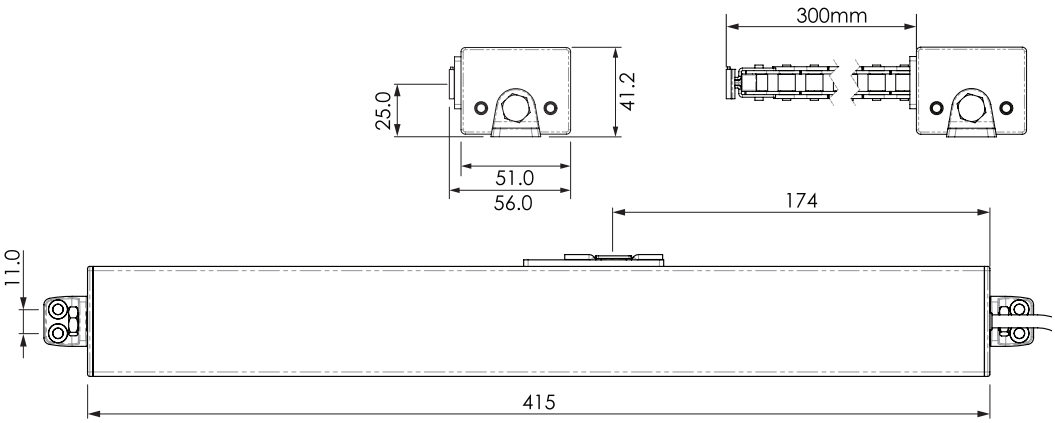



# **TCE300** | TWIN ELECTRIC CHAINWINDER

| PRODUCT DETAILS | |
|---|---|
| **VOLTAGE** | 24V DC |
| **PUSH/PULL FORCE** | 800N |
| **CHAIN PROJECTION** | 300mm |
| **WINDOW HEIGHT** *(MAX.)* | 1800mm |
| **WINDOW WIDTH** *(MIN - MAX.)* | 850mm - 2400mm |
| **CHAIN** | 304 Stainless Steel |
| **CODE** | 9050600 - TCE300 |

The Doric Ventus TCE300 is our twin chain electric winder featuring a dual 300mm chain projection. It offers operation for the largest windows measuring up to 2400mm wide by 1800mm high. The winder producing up to 800N of push/pull force is able to operate a window of up to 80kg in weight.



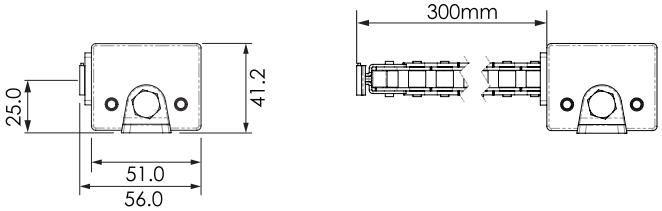


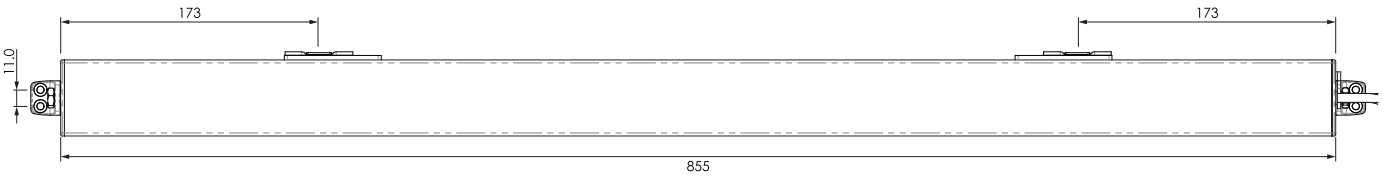

# **ELECTRIC CHAINWINDER** WIRING

## Chainwinder **Switch Unit**

Ventus chainwinders have an internal circuit board called a switch unit. This switch unit is not polarity sensitive, allowing the unit to run in either direction dependent on the signal sent and received.

| | |
|---|---|
| +/– Runs open | –/+ Runs closed |

If you press open on a remote or a BMS, the unit will receive a +/- signal to open the motor.

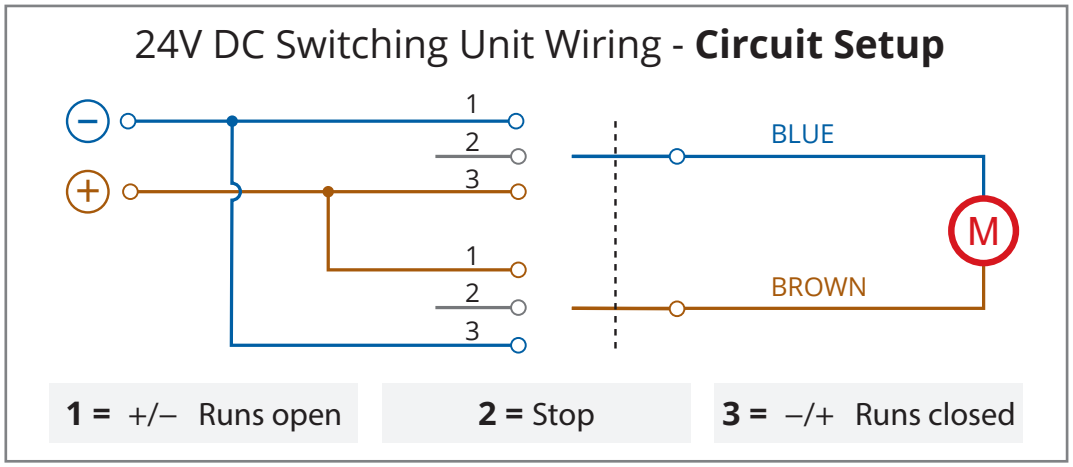


## Power **Supply**

**1 to 4 Motors:**
2.5 Amp Power Pack



**5 to 8 Motors:**
10 Amp Power Pack



## Peak Amp **Guide**

| | | | | | | |
|---|---|---|---|---|---|---|
| **SCE100s Standard Chain Electric** | - | Peak Amp | 1.0 Amp | – | Normal | 0.4-0.6 Amp |
| **SCE300s Standard Chain Electric** | - | Peak Amp | 1.0 Amp | – | Normal | 0.4-0.6 Amp |
| **LCD300 Large Chain Electric** | - | Peak Amp | 2.8 Amp | – | Normal | 0.4-1.0 Amp |
| **TCE300 Twin Chain Electric** | - | Peak Amp | 5.6 Amp | – | Normal | 0.8-2.0 Amp |

**WIRING**

The automation products operate off a 24V DC system and requires a minimum cable diameter of 0.75mm to reduce voltage loss over longer distances.

# **SYNCHRONISING** CHAINWINDERS

The Ventus Plug and Play system allows for a faster and more cost effective method of linking chainwinders together.

The Sync Lead guarantees that **both winders** will run in synchronisation. If a load related issue is detected, for example, one of the winders gets jammed or damaged, the protection circuit activates isolating the linked pair until the issue is resolved.

Ideally, the Sync Lead is fitted next to the controller allowing for ease of install, keeping the electrical components in one location.

Unlike other systems that use a network cable to achieve synchronisation, Ventus does not require additional components such as network adapters and does not require a separate power pack.

**Applicable only to:**
**SCE100, SCE300 & LCD300**
SCE300 + SCE300 Sync shown

**Important:** *When using a Sync Lead, refer to the correct schematic to ensure you're using the correct power pack*

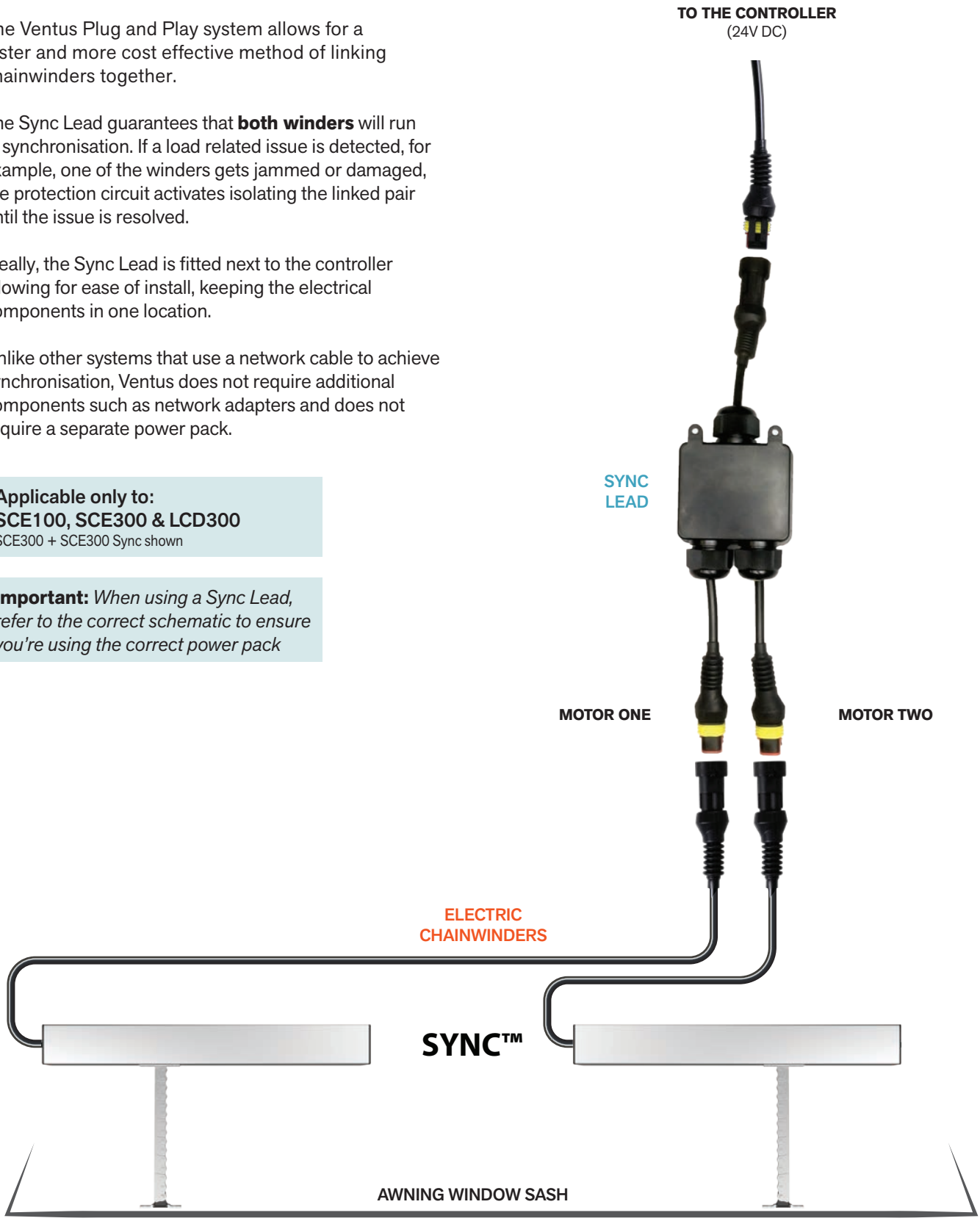

# INNOVATORS
OF HARDWARE FOR WINDOWS AND DOORS

VENTUS_AUTO_HARDWARE_2021 v1.3 - 24.03.2021

**SYDNEY**
38 Redfern St,
Wetherill Park
Sydney, NSW 2164
Australia
Ph: +61 2 9609 2555
**www.doric.com.au**

**AUCKLAND**
26/C Triton Drive,
Albany, North Shore,
Auckland 0632
New Zealand
Ph: +64 9 415 5535
**www.doric.co.nz**

**KUALA LUMPUR**
No.17 Jalan 51/203A,
Kawasan Perindustrian Tiong Nam,
Seksyen 51, 46050 Petaling Jaya,
Selangor, Malaysia
Ph: +603 777 33 628
**www.doric.com.my**

ALCHIN LONG GROUP

Doric

VENTUS automation

AUTOMATED HARDWARE RANGE