查询BAP70-02供应商

DISCRETE SEMICONDUCTORS

DATA SHEET

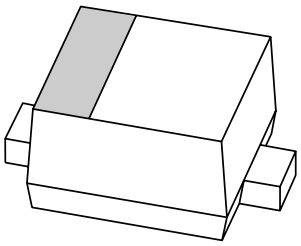

BAP70-02
Silicon PIN diode

Product specification
Supersedes data of 2002 Jul 02

2002 Aug 06

Philips
Semiconductors

PHILIPS

Silicon PIN diode BAP70-02

FEATURES

- High voltage, current controlled RF resistor for attenuators
- Low diode capacitance
- Very low series inductance.

APPLICATIONS

- RF attenuators
- (SAT)TV
- Car radio.

DESCRIPTION

Planar PIN diode in a SOD523 ultra small SMD plastic package.

PINNING

PIN	DESCRIPTION
1	cathode
2	anode

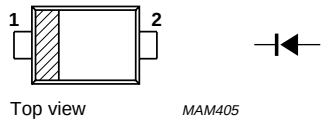

Marking code: K8.

Fig.1 Simplified outline (SOD523) and symbol.

LIMITING VALUES

In accordance with the Absolute Maximum Rating System (IEC 60134).

SYMBOL	PARAMETER	CONDITIONS	MIN.	MAX.	UNIT
V_R	continuous reverse voltage		–	50	V
I_F	continuous forward current		–	100	mA
P_{tot}	total power dissipation	T_s = 90 °C	–	415	mW
T_{stg}	storage temperature		–65	+150	°C
T_j	junction temperature		–65	+150	°C

ELECTRICAL CHARACTERISTICS

T_j = 25 °C unless otherwise specified.

SYMBOL	PARAMETER	CONDITIONS	TYP.	MAX.	UNIT
V_F	forward voltage	I_F = 50 mA	0.9	1.1	V
I_R	reverse leakage current	V_R = 50 V	–	20	nA
C_d	diode capacitance	V_R = 0 V; f = 1 MHz	570	–	fF
		V_R = 1 V; f = 1 MHz	400	–	fF
		V_R = 5 V; f = 1 MHz	270	–	fF
		V_R = 20 V; f = 1 MHz	200	250	fF
r_D	diode forward resistance	I_F = 0.5 mA; f = 100 MHz	77	100	Ω
		I_F = 1 mA; f = 100 MHz	40	50	Ω
		I_F = 10 mA; f = 100 MHz	5.4	7	Ω
		I_F = 100 mA; f = 100 MHz	1.4	1.9	Ω
τ_L	charge carrier life time	when switched from I_F = 10 mA to I_R = 6 mA; R_L = 100 Ω; measured at I_R = 3 mA	1.25	–	µs
L_S	series inductance	I_F = 100 mA; f = 100 MHz	0.6	–	nH

THERMAL CHARACTERISTICS

SYMBOL	PARAMETER	VALUE	UNIT
$R_{th\ j\text{-}s}$	thermal resistance from junction to soldering point	145	K/W

GRAPHICAL DATA

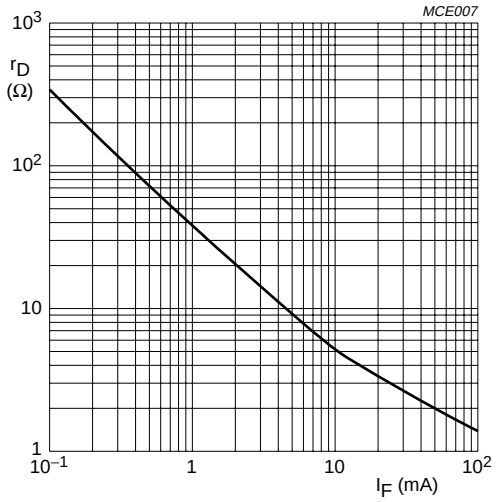

f = 100 MHz; T_j = 25 °C.

Fig.2 Forward resistance as a function of forward current; typical values.

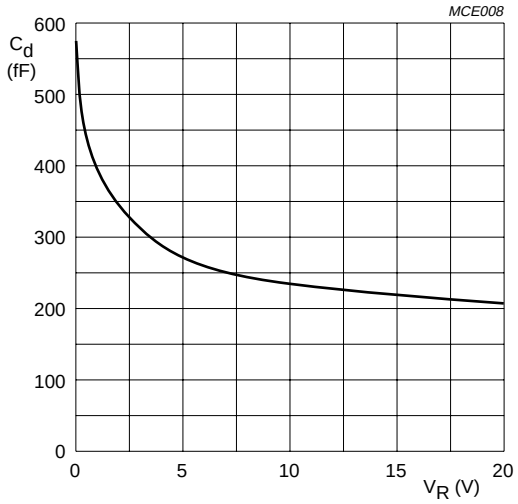

f = 1 MHz; T_j = 25 °C.

Fig.3 Diode capacitance as a function of reverse voltage; typical values.

PACKAGE OUTLINE

Plastic surface mounted package; 2 leads **SOD523**

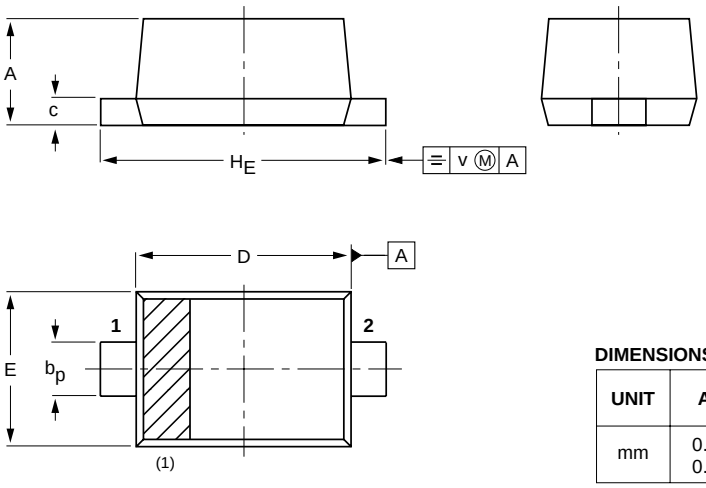

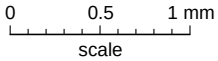

DIMENSIONS (mm are the original dimensions)

UNIT	A	b_p	c	D	E	H_E	v
mm	0.7 0.5	0.35 0.25	0.2 0.1	1.3 1.1	0.9 0.7	1.7 1.5	0.15

Note

1. The marking bar indicates the cathode.

OUTLINE VERSION	REFERENCES				EUROPEAN PROJECTION	ISSUE DATE
	IEC	JEDEC	EIAJ			
SOD523			SC-79			98-11-25

DATA SHEET STATUS

DATA SHEET STATUS(1)	PRODUCT STATUS(2)	DEFINITIONS
Objective data	Development	This data sheet contains data from the objective specification for product development. Philips Semiconductors reserves the right to change the specification in any manner without notice.
Preliminary data	Qualification	This data sheet contains data from the preliminary specification. Supplementary data will be published at a later date. Philips Semiconductors reserves the right to change the specification without notice, in order to improve the design and supply the best possible product.
Product data	Production	This data sheet contains data from the product specification. Philips Semiconductors reserves the right to make changes at any time in order to improve the design, manufacturing and supply. Changes will be communicated according to the Customer Product/Process Change Notification (CPCN) procedure SNW-SQ-650A.

Notes

1. Please consult the most recently issued data sheet before initiating or completing a design.
2. The product status of the device(s) described in this data sheet may have changed since this data sheet was published. The latest information is available on the Internet at URL http://www.semiconductors.philips.com.

DEFINITIONS

Short-form specification — The data in a short-form specification is extracted from a full data sheet with the same type number and title. For detailed information see the relevant data sheet or data handbook.

Limiting values definition — Limiting values given are in accordance with the Absolute Maximum Rating System (IEC 60134). Stress above one or more of the limiting values may cause permanent damage to the device. These are stress ratings only and operation of the device at these or at any other conditions above those given in the Characteristics sections of the specification is not implied. Exposure to limiting values for extended periods may affect device reliability.

Application information — Applications that are described herein for any of these products are for illustrative purposes only. Philips Semiconductors make no representation or warranty that such applications will be suitable for the specified use without further testing or modification.

DISCLAIMERS

Life support applications — These products are not designed for use in life support appliances, devices, or systems where malfunction of these products can reasonably be expected to result in personal injury. Philips Semiconductors customers using or selling these products for use in such applications do so at their own risk and agree to fully indemnify Philips Semiconductors for any damages resulting from such application.

Right to make changes — Philips Semiconductors reserves the right to make changes, without notice, in the products, including circuits, standard cells, and/or software, described or contained herein in order to improve design and/or performance. Philips Semiconductors assumes no responsibility or liability for the use of any of these products, conveys no licence or title under any patent, copyright, or mask work right to these products, and makes no representations or warranties that these products are free from patent, copyright, or mask work right infringement, unless otherwise specified.

NOTES

NOTES

Philips Semiconductors – a worldwide company

Contact information

For additional information please visit **http://www.semiconductors.philips.com**. Fax: **+31 40 27 24825**
For sales offices addresses send e-mail to: **sales.addresses@www.semiconductors.philips.com**.

© Koninklijke Philips Electronics N.V. 2002 SCA74

All rights are reserved. Reproduction in whole or in part is prohibited without the prior written consent of the copyright owner.

The information presented in this document does not form part of any quotation or contract, is believed to be accurate and reliable and may be changed without notice. No liability will be accepted by the publisher for any consequence of its use. Publication thereof does not convey nor imply any license under patent- or other industrial or intellectual property rights.

Printed in The Netherlands 613516/03/pp8 Date of release: 2002 Aug 06 Document order number: 9397 750 10093

Let's make things better.

Philips Semiconductors

PHILIPS